Small Conveyor

Overview

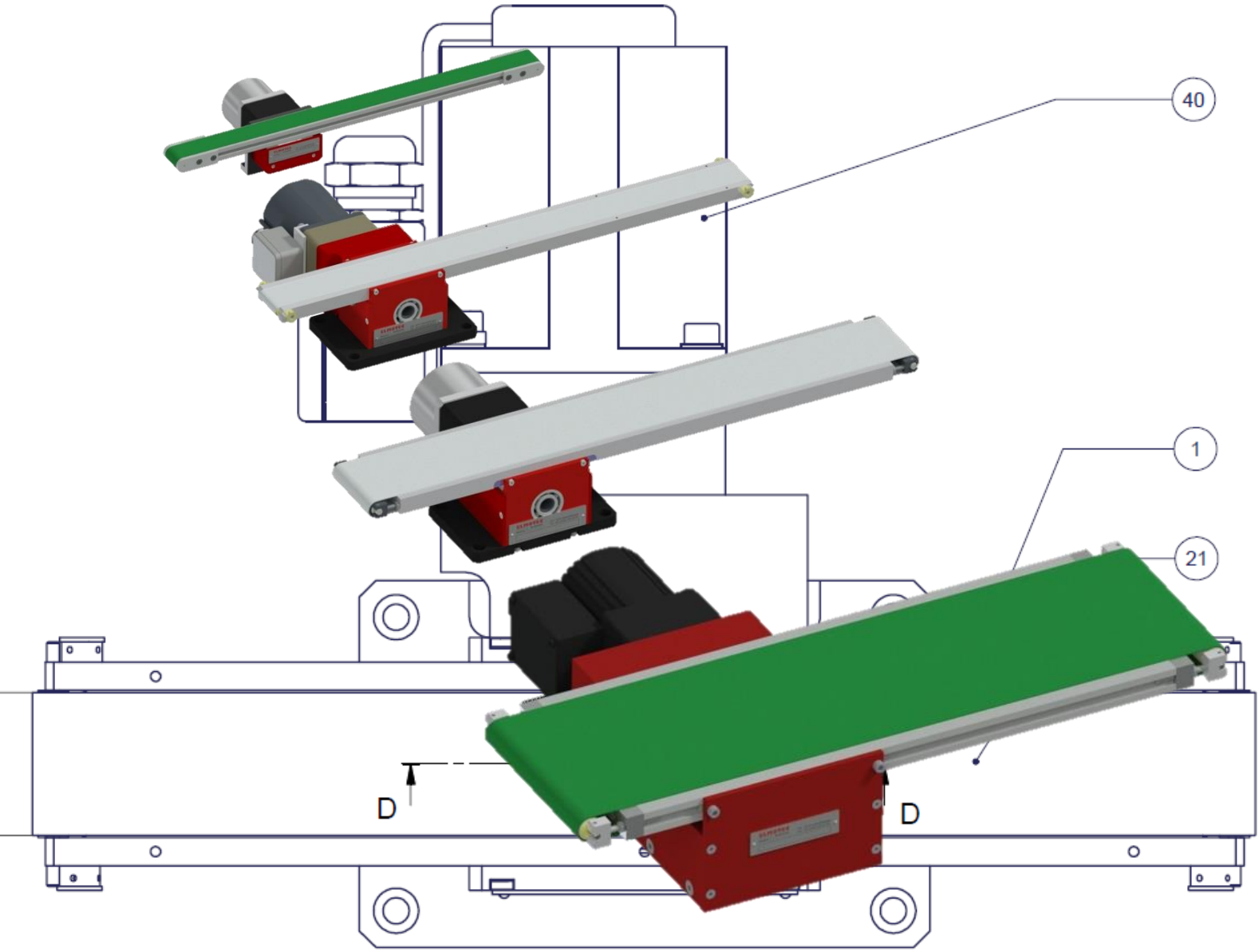

Technical specs subject to change

Overview

Belt widths (mm)	Belt lengths (mm)	Small Conveyor	Characteristics
5 **10** **15** **20** **25** **30**	250 300 400 500 600 700 800 900 1000 1300	**MFB** 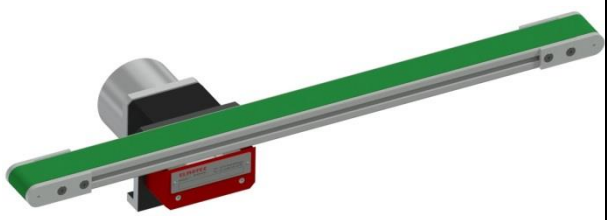	• Diameter of the glide roller: 20mm • Temperature resistance of the belt: –20°C to +50°C • Drive unit may be shifted freely to either side of the belt plate • Transportation belt stretches itself • Fast belt change • Belt plate made of anodized aluminum • Transportation belt is antistatic
35	150 200 300 400 500 600 700 800 900 1000 1100 1200 1300	**KFB** 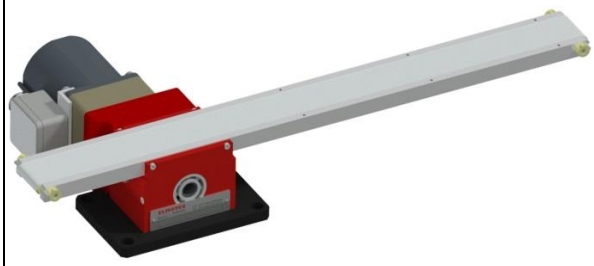	• Diameter of the glide roller: 8,5 mm • Temperature resistance of the belt: -30°C to +100°C • Drive position may be shifted freely to either side of the belt plate • Transportation belt for the food industry • Transportation belt is embedded in the belt plate • Belt plate made of solid anodized aluminum • Transportation belt is antistatic
67 **87**	200 300 400 500 600 700 800 900 1000 1200 1400 1600 1800 2000	**FB** 	• Diameter of the glide roller : 15 mm • Temperature resistance of the belt: -30°C to +100°C • Drive position may be shifted freely to either side of the belt plate • Transportation belt for the food industry • Transportation belt is embedded in the belt plate • Belt plate made of solid anodized aluminum • Transportation belt is antistatic •
130 **150** **220** **310**	300 400 500 600 700 800 900 1000 1200 1400 1600 1800 2000 3000	**GFB** 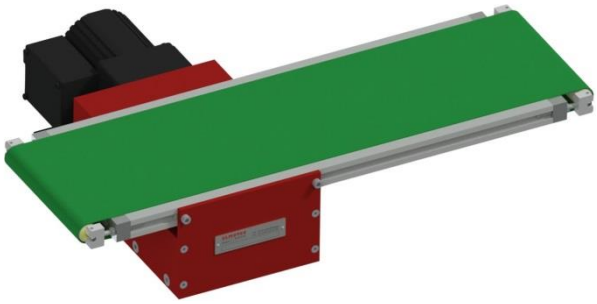	• Diameter of the glide roller: 20mm • Temperature resistance of the belt: –20°C to +60°C • Drive unit may be shifted freely to either side of the belt plate • Transportation belt stretches itself • Fast belt change • Belt plate made of solid anodized aluminum • Transportation belt is antistatic

1 MFB Conveyor

1.1 Technical Specs

- Belt widths: 5, 10, 15, 20, 25 and 30 mm
- Belt lengths: 250 mm to 1300 mm
- Diameter of the glide roller: 20 mm
- Maximum belt load (distributed): 2 kg
- Belt speeds: fixed or variable

- Drive unit may be shifted freely to either side of the belt plate
- Fast belt change
- Belt plate is made of solid aluminum

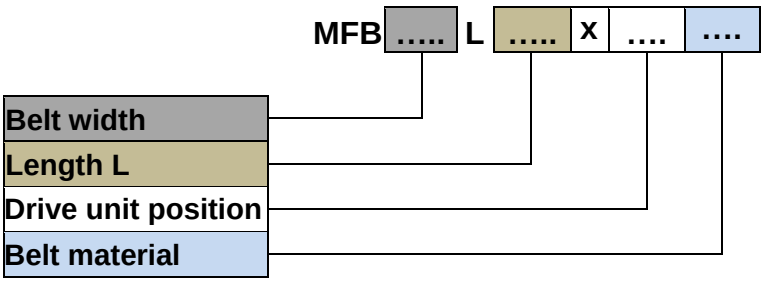

Standard belt type **A**

- Temperature resistance of the belt: -20°C to +60°C
- Belt material: Polyurethan green
- Antistatic: Yes
- Transportation belt stretches itself: Yes





1.2 Dimension MFB Conveyor

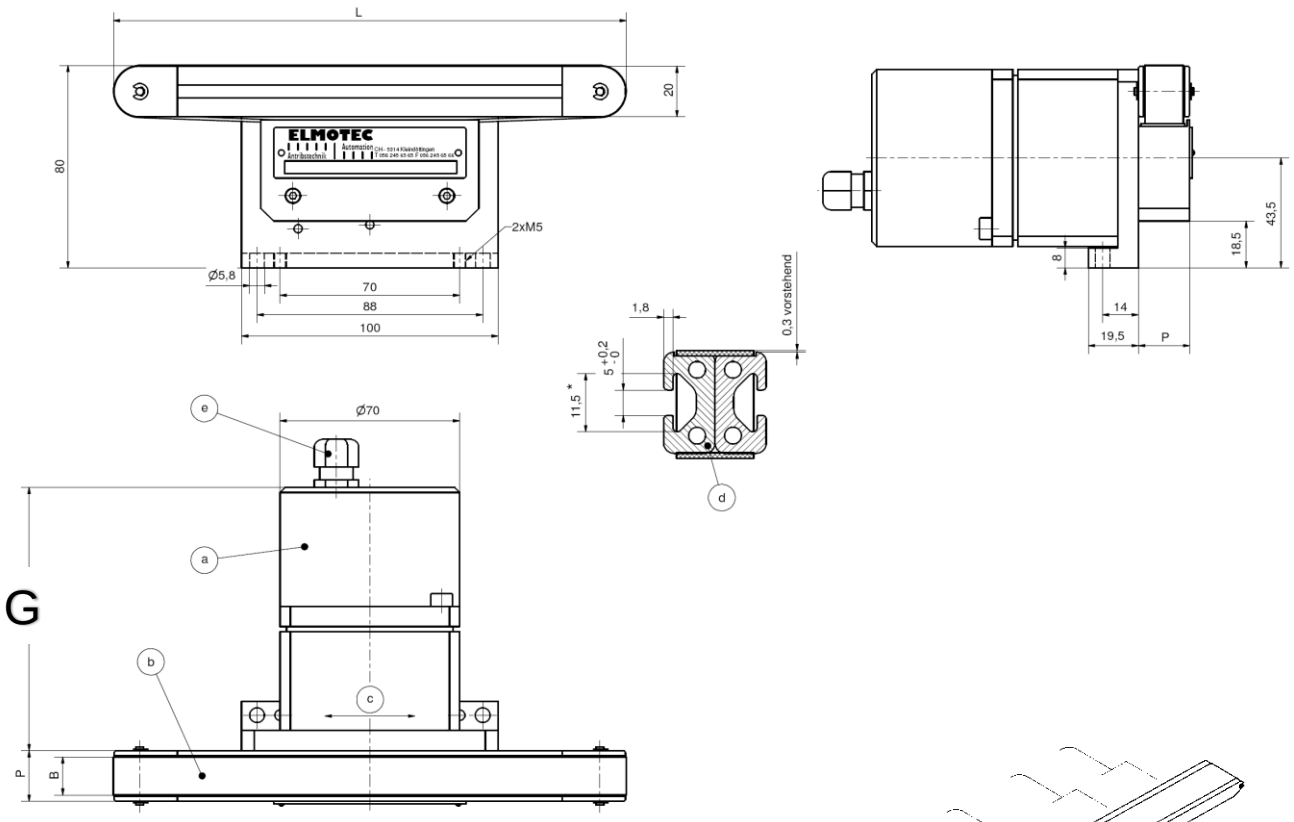

** With 5mm belt groove only on the side of the motor*

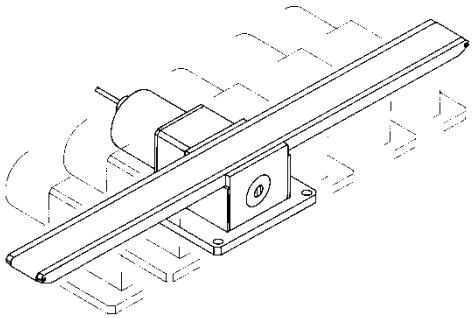

MFB width	
Drive	**Width G**
Fixed drive 230V	104mm
RGB	175mm
Servo	177mm
24V	139mm

MFB belt width (mm)	
Belt width B	**Profile width P**
5	10
10	15
15	20
20	25
25	30
30	35

MFB length L in mm	
	500
	600
250	700
300	800
350	900
400	1000
450	1300

2 KFB Conveyor

2.1 Technical Specs

- Belt widths: 35 mm
- Belt lengths: 150 mm bis 1300 mm
- Diameter of the glide roller: 8,5 mm
- Maximum belt load (distributed): 2 kg
- Belt speeds: fixed or variable

- Drive unit may be shifted freely to either side of the belt plate
- Belt plate made of solid anodized aluminum
- Belt is embedded 0,5 mm in the belt plate
- Belt direction is changeable
- Solid structure

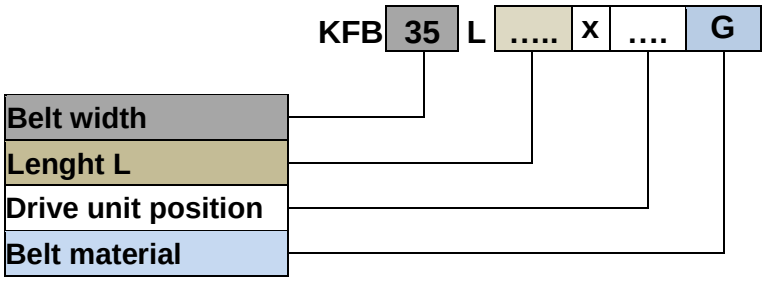

Standard belt type **0.2**

- Temperature resistance of the belt: -30°C to +100°C
- Belt material: Polyurethane white surface smooth
- Antistatic: Yes
- Suitable for food and pharmaceutical industry: Yes

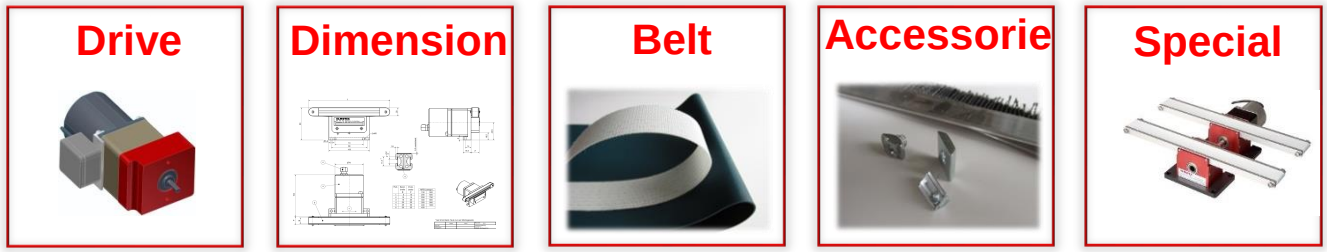



2.2 Dimension KFB Conveyor

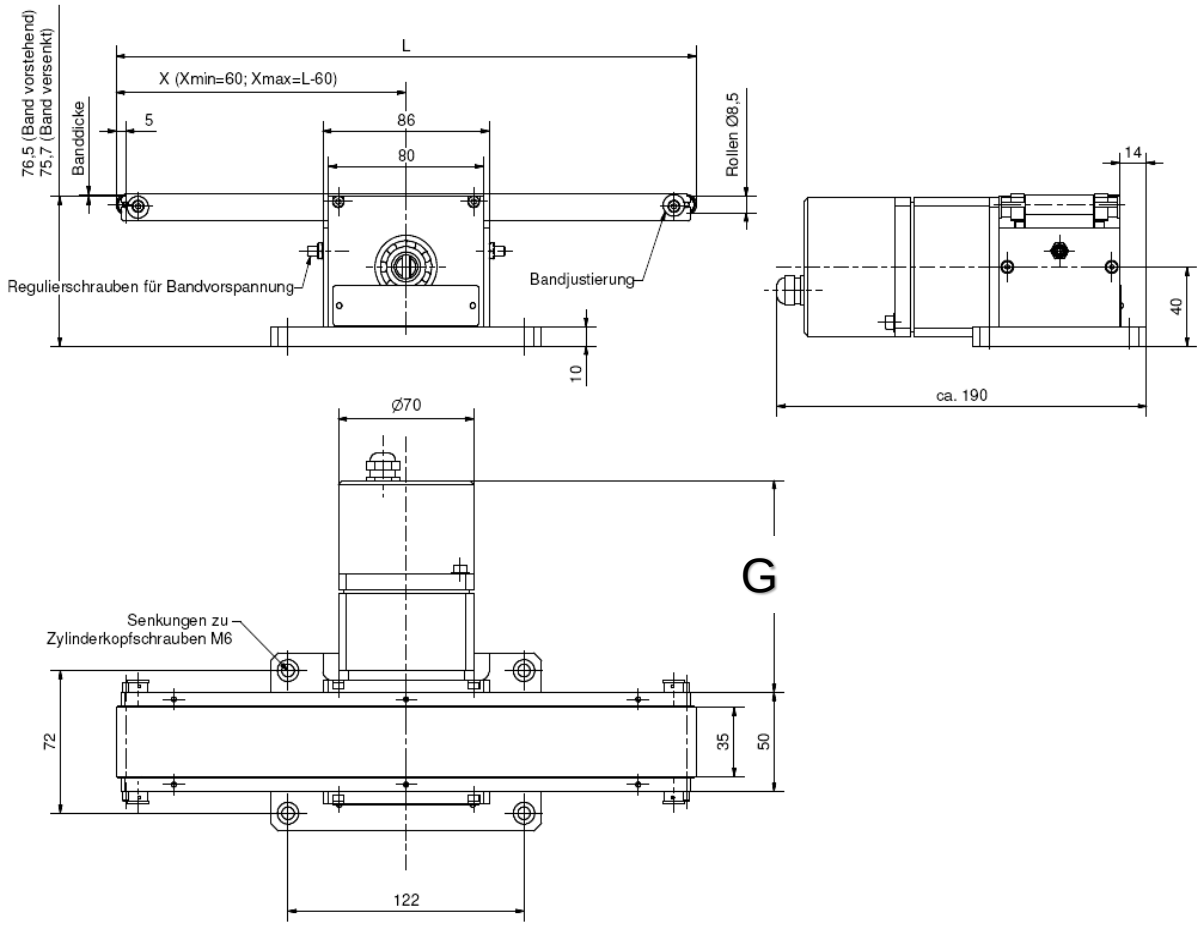

KFB width	
Drive	**Width G**
Fixed drive 230V	107mm
RGB	167mm
Servo	169mm
24V	131mm

KFB length L in mm
200
300
400
500
600
700
800
900
1000
1100
1200
1300

3 FB Conveyor

3.1 Technical Data

- Belt width: 67 mm / 87 mm
- Belt length: 150 mm to 2000 mm
- Diameter of the glide roller: 15 mm
- Maximum belt load (distributed): 2 kg
- Temperature resistance of the belt: -30°C to +100°C

- Drive unit may be shifted freely to either side of the belt plate
- Belt plate made of solid anodized aluminum

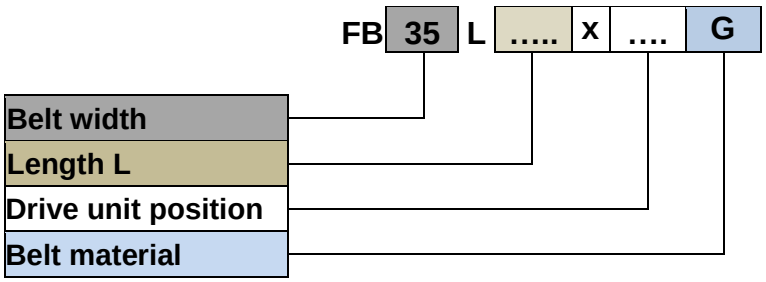

Standard belt type **0.2**

- Temperature resistance of the belt: -30°C to +100°C
- Belt material: Polyurethane white surface smooth
- Antistaticy: yes
- Suitable for food and Pharmaceutical industry: yes

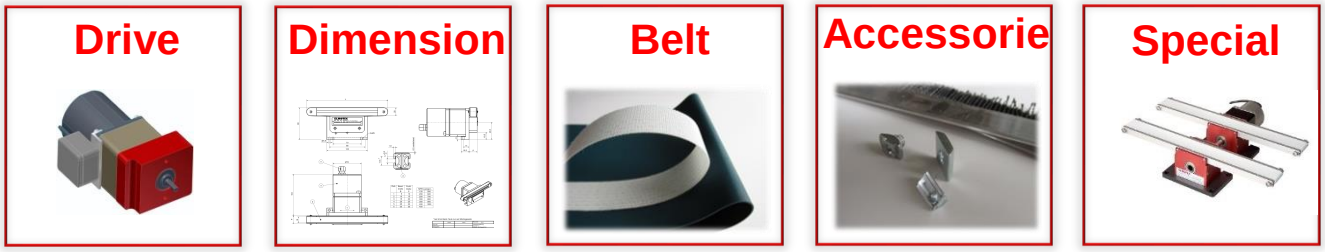

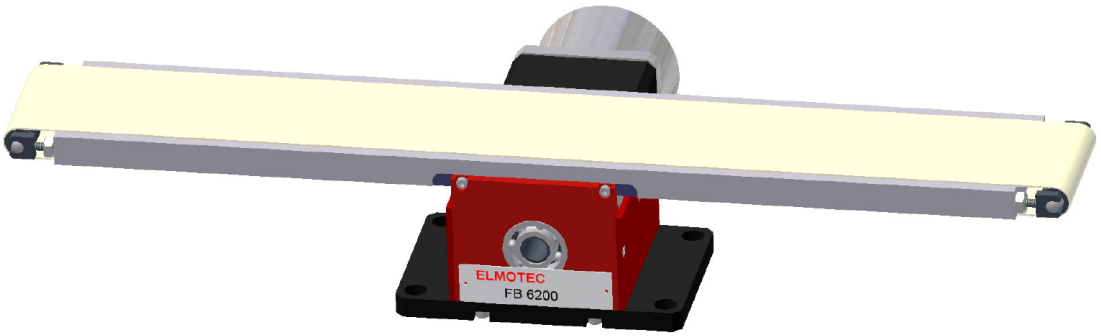

3.2 Dimension FB Conveyor

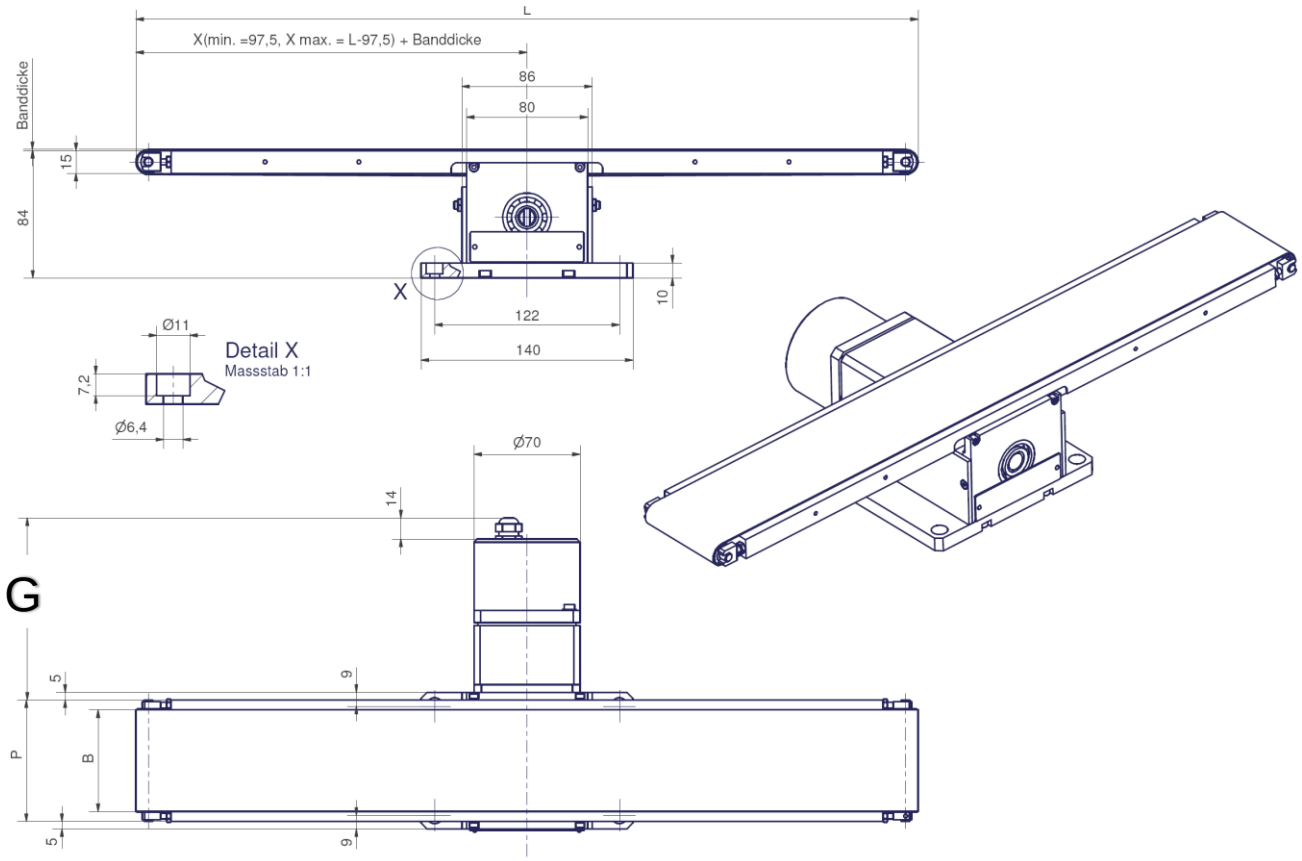

FB width	
Drive	**Width G**
Fixed drive 230V	120mm
RGB	172mm
Servo	174mm
24V DC	136mm

FB belt width (mm)	
Belt width B	**Belt width B**
67	80
87	100

FB length L in mm
165
215
315
415
515
615
715
815
915
1015
1115
1215
1415
1615
1815
2015

4 GFB Conveyor

4.1 Technical Specs

- Belt widths: 130 mm, 150 mm, 220 mm, 310 mm
- Belt lengths: 300 mm bis 3000 mm
- Diameter of the glide roller: 20 mm
- Maximum belt load (distributed): 3 kg
- Temperature resistance of the belt: -20°C bis +50°C

- Drive unit may be shifted freely to either side of the belt plate
- Belt plate made of solid anodized aluminum

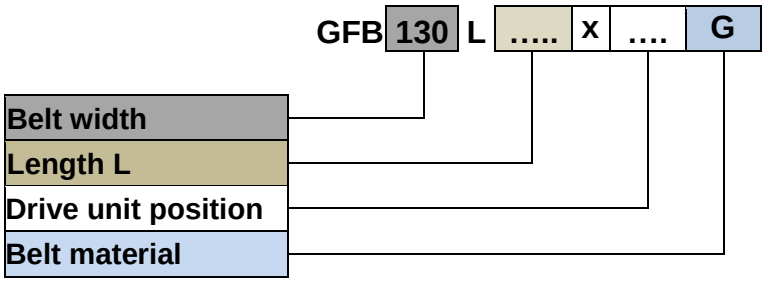

Standard belt type **A**

- Temperature resistance of the belt: -20°C to +60°C
- Belt material: Polyurethane
- Antistatic: Yes

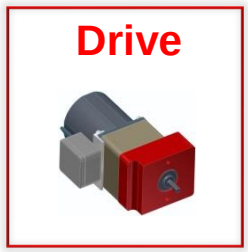

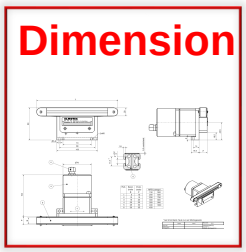

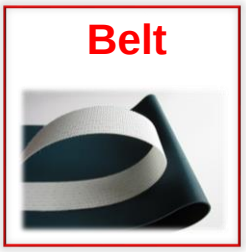





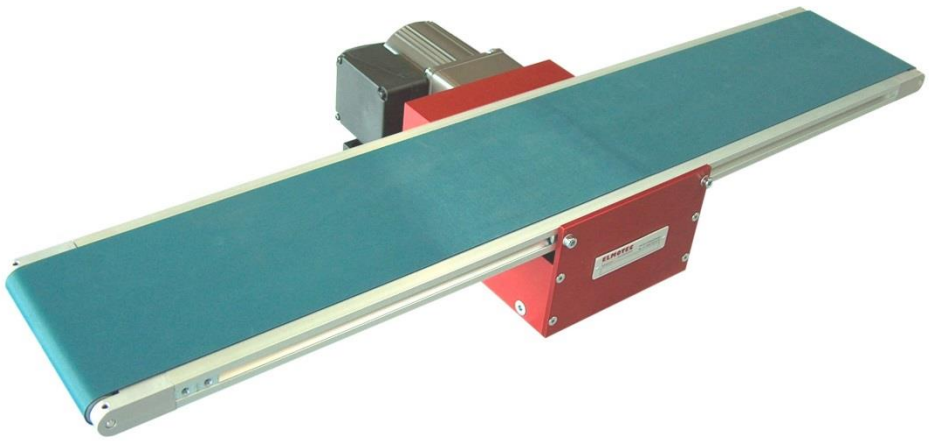

4.2 Dimension GFB Conveyor

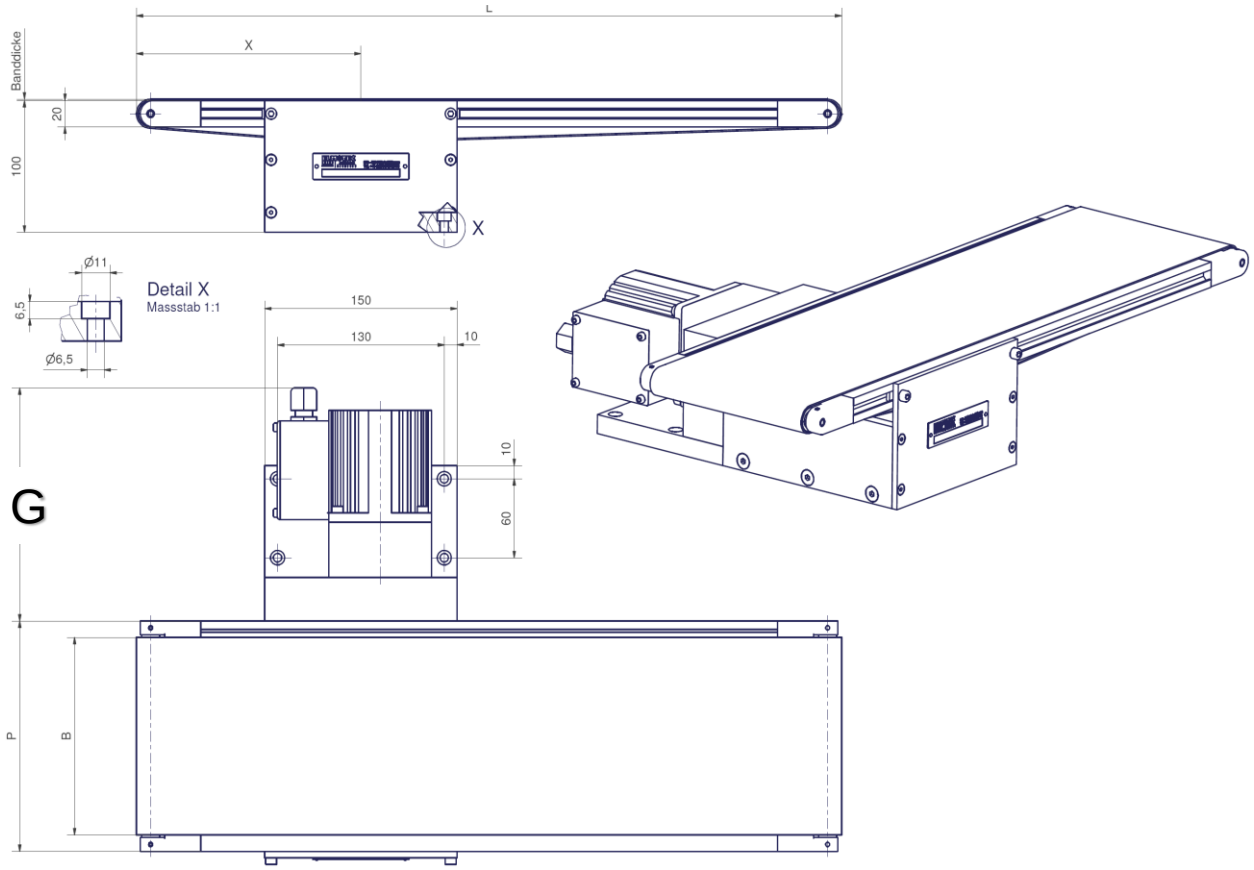

GFB width	
Drive	**Width**
Fixed drive 230V	120mm
RGB	177mm
Servo	179mm
24V DC	141mm

GFB belt width (mm)	
Belt width B	**Belt width B**
130	150
150	175
220	245
310	335

GFB length L in mm	
300	1300
350	1400
400	1500
450	1600
500	1700
550	1800
600	1900
650	2000
700	2100
750	2200
800	2300
850	2400
900	2500
950	2600
1000	2700
1150	2800
1200	2900
1250	3000

5 Drive

5.1 Servo Drive MFB/ FB/ KFB/ GFB

Ordercode:

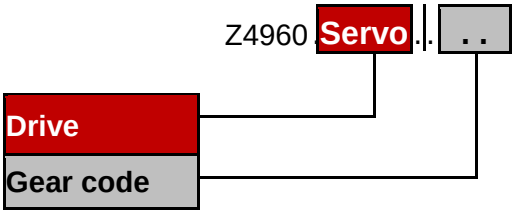

- Speed changeable
- Operating speed adjustable from 24-800 mm/s
- DC brushless motor with external controller and gear
- Suitable for quick start and stop actions
- Clockwise / anti-clockwise rotation
- Connection 230V/50Hz (3m from controller)
- External controller for cabinet installation
- Panel A or Panel B and external control possible with I/O
- Standard cable length 5m, optional 10m

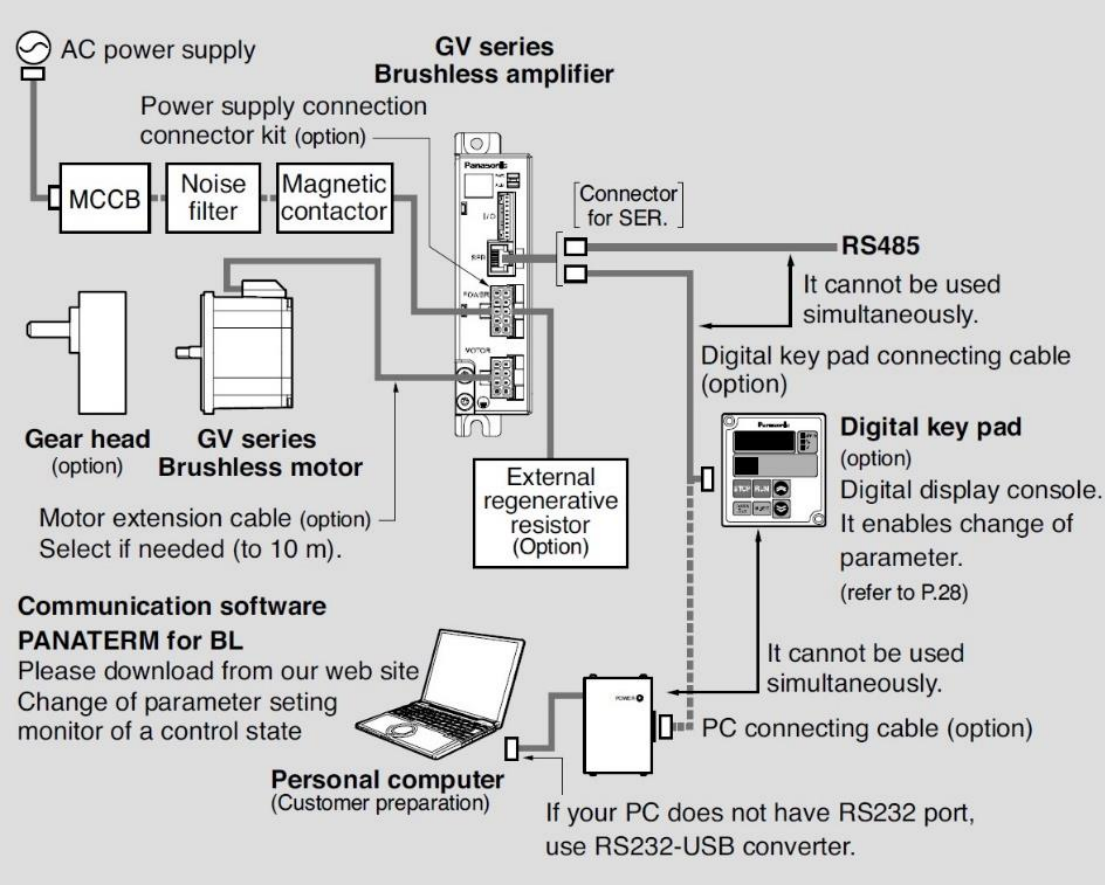

		Transmission ratio i		Belt speed mm/s	
				V min	V max
Servo-Drive KFB / FB		**Standard H500051**	5:1	24	800
Servo-Drive MFB / GFB				24	600
Servo-Drive KFB / FB		**Option H500118**	10:1	12	500
Servo-Drive MFB / GFB				12	400
Servo-Drive KFB / FB		**Option H500119**	20:1	8	250
Servo-Drive MFB / GFB				8	200

5.1.1 Wiring and Manual

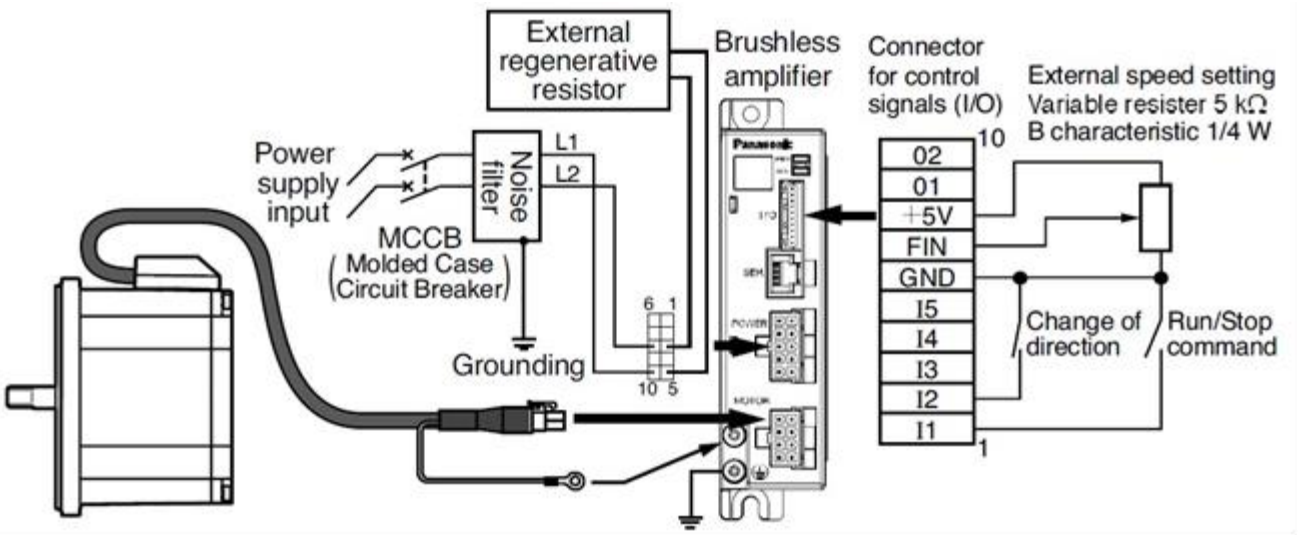

Connector for power supply (POWER)

Terminal number	Terminal symbol	Terminal name	Terminal explanation
3	B	Terminal for external regenerative resistor	Please connect external regenerative resistor of an option if needed. External regenerative resistor name: 100 V type DV0P2890 (50 Ω) 200 V type DV0PM20068 (200 Ω)
5	P		
6	L3	Terminal for power supply input	Connect the terminal to commercial power supply conforming to voltage specification. When you use single phase, connect the main power between L1 and L2 terminals.
8	L2		
10	L1		
1,2,4,7,9	NC	—	Do not connect anything.

Connector for control signals (I/O)

Terminal number	Terminal symbol	Terminal name	Terminal explanation
1	I1*1	Signal input 1	Operation instruction input *1 Motor runs when " I1" and "GND" are shorted, and stops when they are opened.
2	I2*1	Signal input 2	Rotation changeover input *1 CW operation when " I2" and "GND" are shorted, and CCW operation when they are opened. *2
3	I3*1	Signal input 3	Free-run stop input *1 Free-run stop when " I3" and "GND" are shorted,
4	I4*1	Signal input 4	Trip reset input *1 cancels a trip state when " I4" and "GND" are shorted,
5	I5*1	Signal input 5	Free-run stop input *1 Free-run stop when " I5" and "GND" are shorted,
6	GND*3	Signal ground	Common ground of analog speed input and input/ output signal *3
7	FIN	For speed setting Input	Speed can be set by applying voltage DC0 to 5 V. Input impedance 100 kΩ.
8	+5V	The power supply for external speed setting	Power output dedicated when connecting an external variable resistor (5 kΩ, B characteristics) to FIN input (cannot be used for any other purpose.)
9	01*1	Signal output 1	Trip signal output. *1 "L" in trip (Contact ON) Open collector Vce max: DC30 V, Ic max: 50 mA
10	02*1	Signal output 2	Velocity pulse output. *1 (24 pulses / 1 rotation) Open collector Vce max: DC 30 V, Ic max: 50 mA

Input circuit

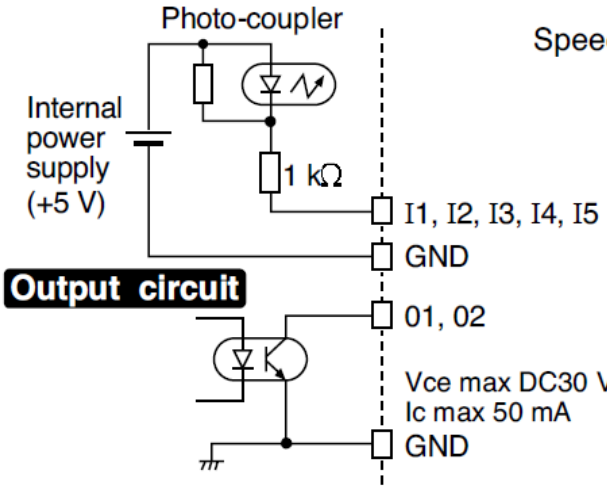

FIN characteristic

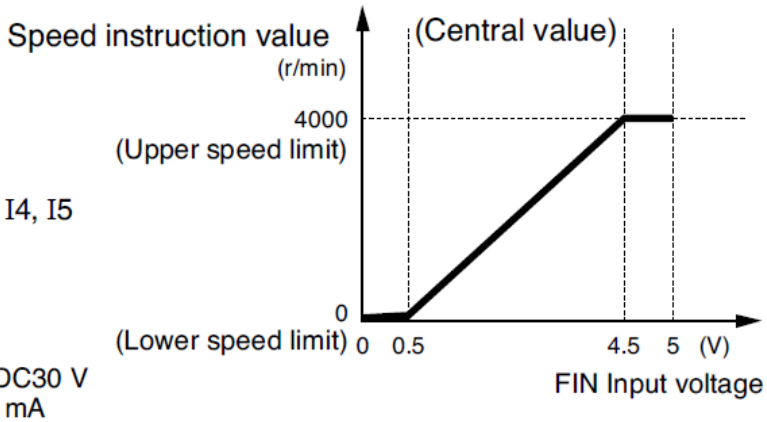

Connector for motor connection (MOTOR)

Terminal number	Terminal symbol	Terminal name	Terminal explanation
1	U	Motor U phase	Connect motor wire U, V and W.
2	V	Motor V phase	
3	W	Motor W phase	
4	5VS	High voltage 5 V	Not isolated from commercial power source. Use care to avoid electric shock and grounding fault.
5	CS1	CS signal 1	
6	CS2	CS signal 2	
7	CS3	CS signal 3	
8	GNDS	High voltage GND	

Connector for communications (SER)

Terminal number	Terminal symbol	Terminal explanation
1	—	Do not connect anything.
2	+5V	DC5 V power supply for Digital key pad
3	SOT	Interface for Digital key pad or PANATERM for BL
4	SIN	
5	RS485+	For connect RS485+
6	RS485–	For connest RS485–
7	GND	Power supply GNG for Digital key pad
8	SCK	Interface for Digital key pad

- Connection of Digital key pad of an option is possible. Digital key pad connecting cable of an option (DV0P383**) is required.
- The terminal number of a modular jack is the below figure

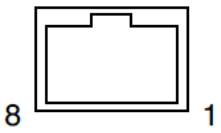

Panel A

Modell DV0P3500

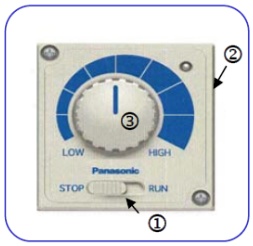

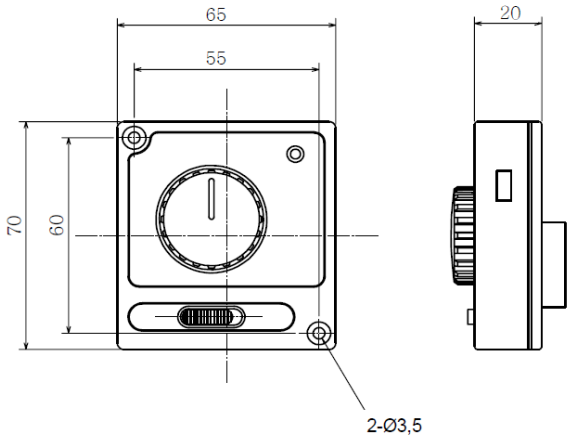

Panel B

Modell DV0P3510

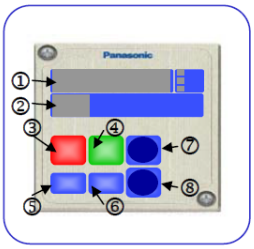

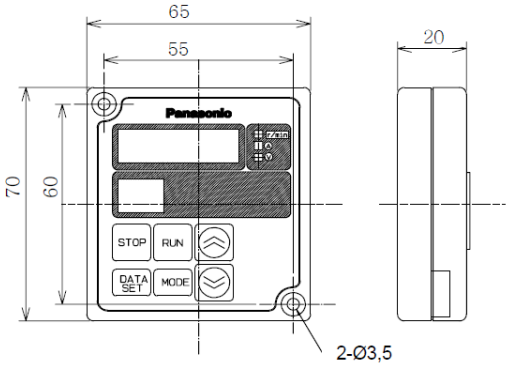

5.2 RGB Variable Speed Drive MFB/ FB/ KFB/ GFB

Order code:

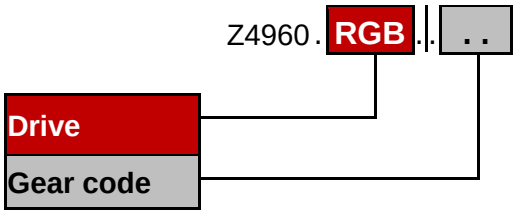

- Gear motor (asynchronous) with governor
- Operating speed adjustable from 1.8-600 mm/s possible with different gears
- Operator control module DVUS or DVSD available
- Clockwise / anti-clockwise rotation with terminal status change
- Connection 230V/50Hz
- Standard cable length 3 m, optional 5m available.



DVUS



DVSD

Variable RGB MFB u. GFB	Drive	Transmission ratio i		Speed belt mm/s	
				V min	V max
	RGB	07	5:1	27	400
		08	7,5:1	17,4	260
		09	10:1	13	195
		10	15:1	8,7	130
		11	20:1	6,5	97,5
		12	25:1	5,2	78
		13	50:1	2,6	39
		14	75:1	1,8	26

Variable RGB KFB u. FB	Drive	Transmission ratio i		Belt speed mm/s	
				V min	V max
	RGB	07	5:1	45	600
		08	7,5:1	27.7	400
		09	10:1	20	300
		10	15:1	13.4	200
		11	20:1	10	150
		12	25:1	8	120
		13	50:1	4	60
		14	75:1	3	40

5.2.1 Wiring Connection RGB

Connection DVUS

Clockwise rotation

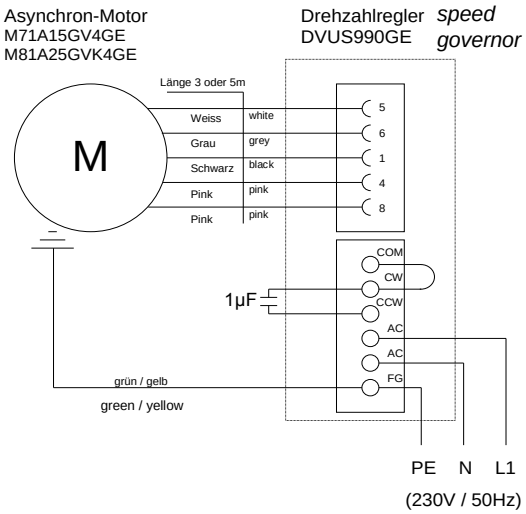

Anti-clockwise rotation

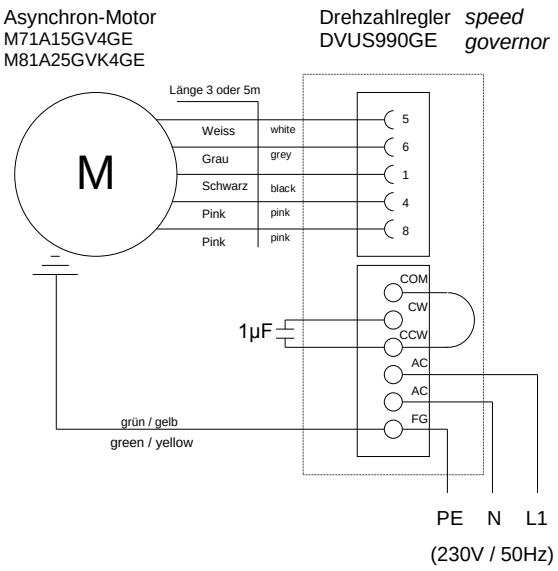

Connection DVSD

Unidirectional rotation

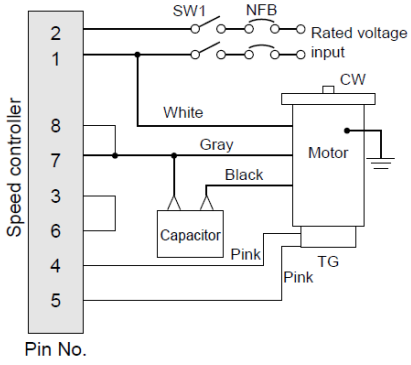

Rotating direction viewed from shaft end	
CW	Clockwise
CCW	Counterclockwise

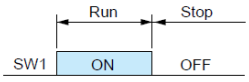

Normal/reverse rotation

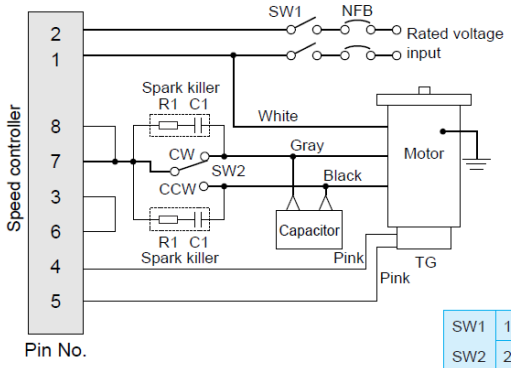

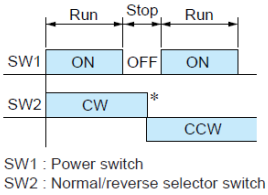

SW1 : Power switch
SW2 : Normal/reverse selector switch

SW1	100 V supply system	5 A or more at 125 VAC
SW2	200 V supply system	5 A or more at 250 VAC
Spark killer R1+C1		DV0P008 (option)

5.3 Fixed Drive MFB/ FB/ KFB

Order code:

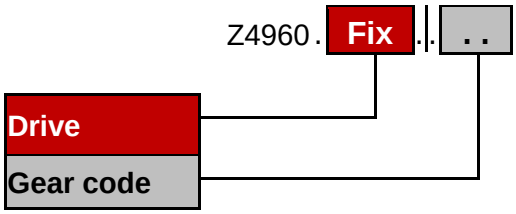

- Only one speed possible
- Connection 230V/50Hz
- Operating speed adjustable from 10-218 mm/s possible with different gears
- Clockwise / anti-clockwise rotation with terminal status change
- Standard cable length 2.5 m

Gearmotor
Connection 230V/50Hz

	Drive $^{1}/_{min}$	Transmission ratio i		Belt speed mm/s
Fixded rive MFB	250	01	8:1	41
		02	25:3	39
		03	10:1	33
		04	25:2	26
		05	50:3	20
		06	20:1	16
		07	25:1	13
		08	33 $^{1}/_{3}$:1	10
	500	01	25:2	52
		02	10:1	65
		03	25:3	78
		04	13 $^{3}/_{4}$:1	48
		05	8:1	82
		06	25:4	104
		07	5:1	131
		08	25:6	152
		09	4:1	164
		10	3:1	218

	Motor $^{1}/_{min}$	Transmission ratio i		Belt speed mm/s
Fixed drive KFB u. FB	250	01	8:1	65.40
		02	25:3	62.80
		03	10:1	52.35
		04	25:2	41.88
		05	50:3	30.00
		06	20:1	25.00
		07	25:1	20.90
		08	33 $^{1}/_{3}$:1	15.00
	500	01	25:2	83.70
		02	10:1	104.70
		03	25:3	125.00
		04	13 $^{3}/_{4}$:1	72.00
		05	8:1	130.8

5.3.1 Wiring Connection Fixed Drive

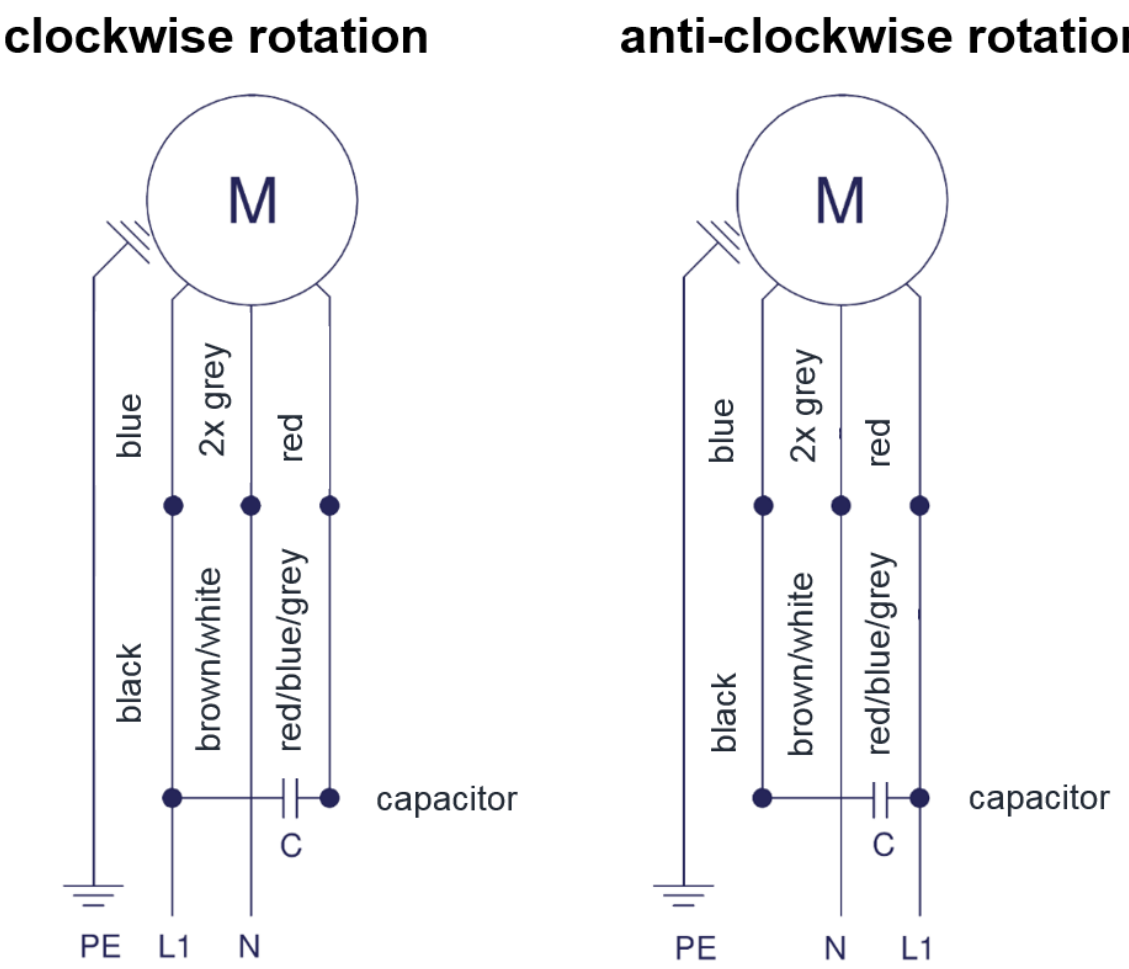



Overview conveyor belt

Belt Code	A	C	D	0.2	0.5	0.6	10	12	13	14
Conveyor type	MFB/GFB standard	GFB option	GFB option	KFB/FB standard	KFB/FB standard	FB option	FB option	FB option	FB option	FB option
Top face material	Polyurethan	Polyurethan	Polyurethan	Polyurethan	Polyurethan-Imprägnierung	Silikon	Polyurethan	Silikon	Polyurethan	Polyamidgewebe
Surface colour	Black/Green	White	Green	White	Transparent	White	White	White	Kobaltblue	Black
Food properties	No	Suitable for the transport of unpacked Food in compliance with food safety regulation (EU) 10/2011 and regulation (EC) 1935/2004 and FDA21CFR	No	Suitable for the transport of unpacked Food in compliance with food safety regulation (EU) 10/2011 and regulation (EC) 1935/2004 and FDA21CFR	Suitable for the transport of unpacked Food in compliance with food safety regulation (EU) 10/2011 and regulation (EC) 1935/2004 and FDA21CFR	Suitable for the transport of unpacked Food in compliance with food safety regulation (EU) 10/2011 and regulation (EC) 1935/2004 and FDA21CFR	Suitable for the transport of unpacked Food in compliance with food safety regulation (EU) 10/2011 and regulation (EC) 1935/2004 and FDA21CFR	Suitable for the transport of unpacked Food in compliance with food safety regulation (EU) 10/2011 and regulation (EC) 1935/2004 and FDA21CFR	Suitable for the transport of unpacked Food in compliance with food safety regulation (EU) 10/2011 and regulation (EC) 1935/2004 and FDA21CFR	No
Electrostatic properties	Yes	Nein	Yes	Yes	Yes	Yes	Yes	Yes	Yes	Yes
Chemical resistence	U	U	U	U	U0	S	U	S	U	
Operating temperature	-20/+60 °C, for a short time +70 °C	-20/+60 °C, for a short time +70 °C	-20/+50 °C	-30/+100 °C, for a short time +120 °C	-30/+100 °C, for a short time +120 °C	-30/+100 °C, for a short time +120 °C	-30/+100 °C, for a short time +120 °C	-40/+180 °C, for a short timeg +190 °C	-30/+100 °C, for a short time +120 °C	-20/+70 °C

6.1 Optional Belt

- Different surface material
- Special belt for transport of unpacked food
- Transparent for LED light
- Special belts for vision systems
- High temperature

All the special belts may be ordered separately.

7 Accessories

- For each conveyor it's possible to order a wiper
- Directional control
  - Standard with POM
  - Possible with aluminum or stainless steel



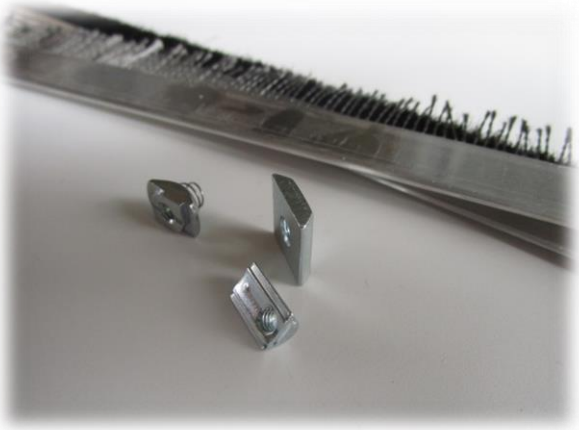

7.1 MFB Groove Stone

Groove stone M3	Nr. 437.19
Groove stone M4	Nr. 370.06
Groove stone M5	Nr. 370.01

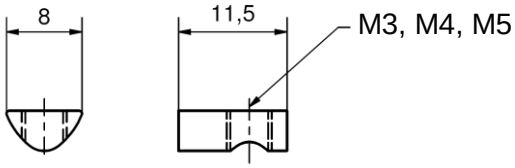

7.2 GFB Groove Stone

Groove stone M5	Nr. B32-50

8 Options (Customized Solutions)

Application	Solution	Advantages
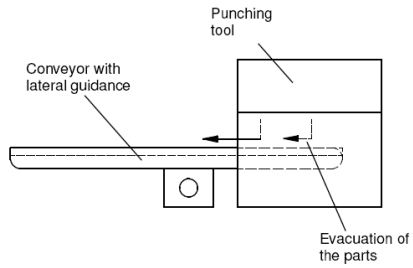	FB change 	• Low design • Coordinated with tool width • Current drive for frequent changer of use • Lateral guides guarantee safe product/material movement
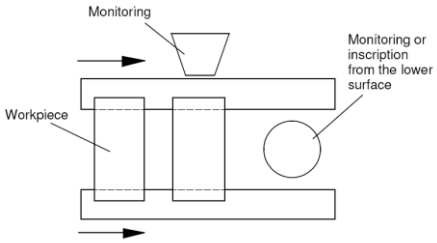	KFB change 	• Low design • Space-saving, because only one drive is needed • Variable speed drive • Synchronous transportation
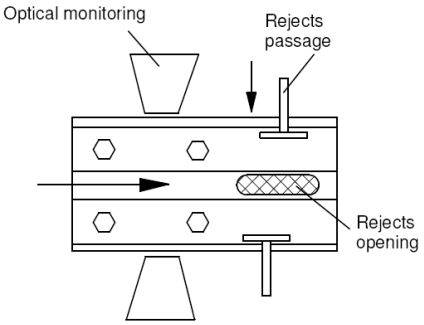	KFB change 	• Vertical and horizontal monitoring/inscription possible • One drive • Due to variable belt distance large parts can be processed

Manufacturer:

ELMOTEC Antriebstechnik AG
Gewerbestrasse 30
CH-5314 Kleindöttingen

Tel: +41 (0) 56 245 65 65
Fax: +41 (0) 56 245 65 66
E-Mail: info@elmotec.ch
Homepage: http://www.elmotec.ch/

Stand: 07/2016