Soldering Head SH5500®

Intelligent technology for an automated soldering process

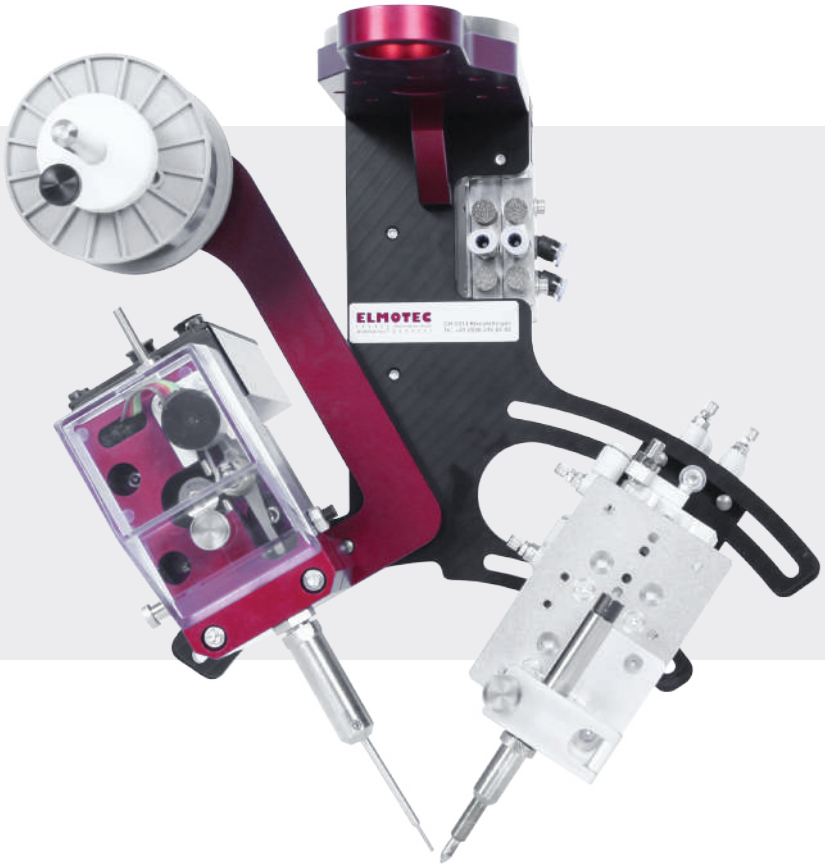

All-in-one System

High-precision wire feeder
(DVS 1490®)

Monitoring and traceability

The Soldering Head combines the latest technologies in soldering in one system.

ELMOTEC Automation Antriebstechnik

www.elmotec.ch
info@elmotec.ch
YouTube

Quick and simple integration on the robot

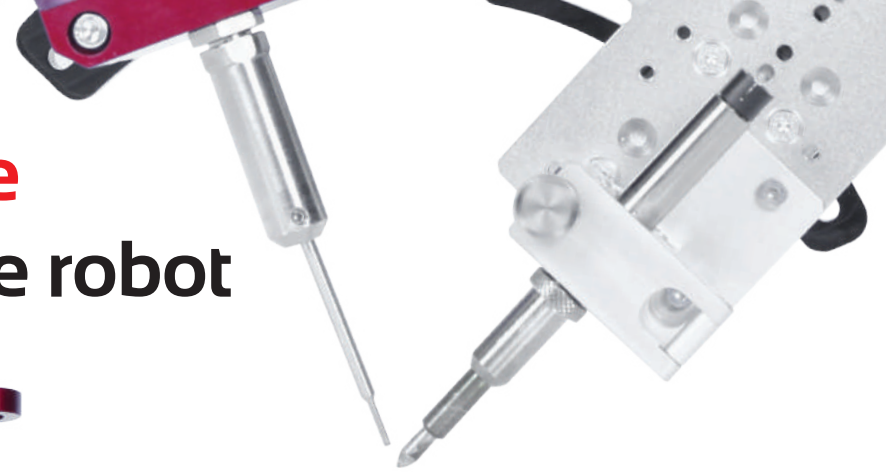

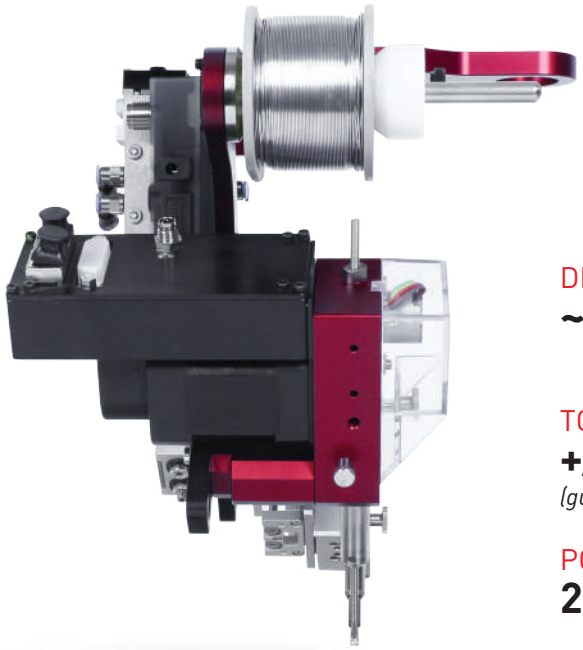

DIMENSIONS
~250 x 250 x 250 mm

TOTAL WEIGHT
~ 4 kg
(excl. wire)

TOLERANCE DVS
+/- 0.1 mm
(guide value)

SPEED DVS
0.1 – 150 mm/s

POWER COMSUMPTION DVS
24 VDC / 5A

INTERFACE DVS
Digital I/O, RS-232,
Profinet *(optional)*

Subject to technical changes

Advantages

- **Quick installation**, start-up operation and maintenance
- **Monitoring and traceability** (temperature, tin amount)
- **Position controlled feeder**
- **Simple controlling**:
  - Wire feeder with RS-232 / Profinet
  - Axis with Digital I/O
- Work angle of soldering iron and wire **adjustable**
- **Brushless-DC motor** in wire feeder DVS
- **High-performance** closed-loop **control** in wire feeder
- **Different soldering systems integrable** e.g. Weller, Ersa, JBC, Metcal

Soldering Head SH5500®

Base model with additional options

Standard incl.:
» Pneumatic cylinder or electrical motor
» Cleaning station
» Wire adjustment unit
» Cable length 5 m



0108888
Diagnosis wire end
Ø 0.23-2.0mm



DVS1490_Profinet
Profinet card



0109516
Suction front pipe
soft solder



KL1490L15
Cable length
15 m

ELMOTEC Automation Löttechnik

ELMOTEC
Antriebstechnik AG
Gewerbestrasse 30
CH-5314 Kleindöttingen

+41 (0)56 245 65 65
info@elmotec.ch
www.elmotec.ch